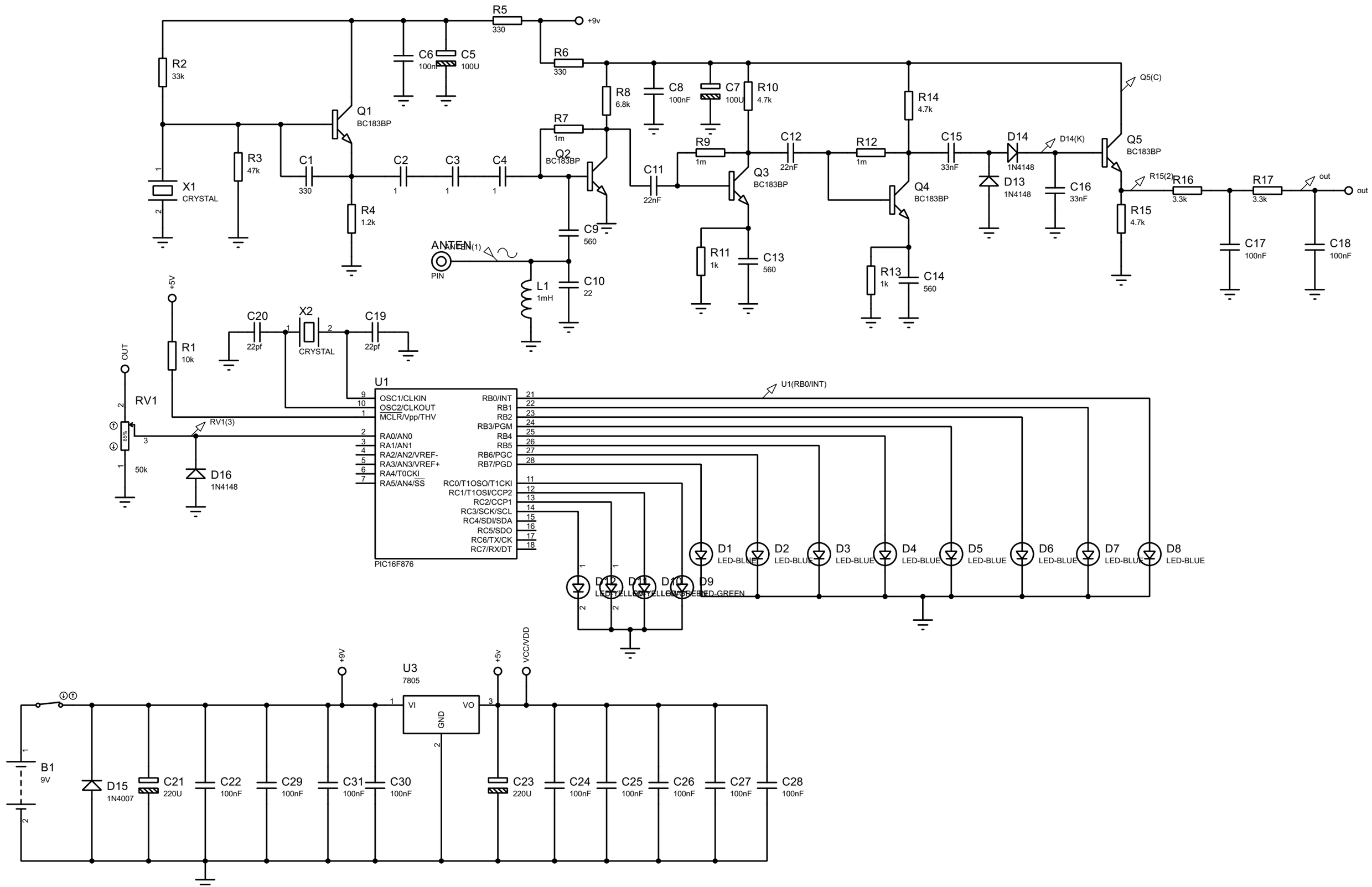
R5
330
+9v
R6
330
R2
33k
C6
100nF
C5
100U
R8
6.8k
C8
100nF
C7
100U
R10
4.7k
R14
4.7k
Q5(C)
Q1
BC183BP
R7
1m
Q2
BC183BP
R9
1m
C12
22nF
R12
1m
C15
33nF
D14
1N4148
D14(K)
Q5
BC183BP
R3
47k
C1
330
C2
1
C3
1
C4
1
C11
22nF
Q3
BC183BP
Q4
BC183BP
D13
1N4148
C16
33nF
R15(2)
R16
3.3k
R17
3.3k
out
out
X1
CRYSTAL
R4
1.2k
C9
560
ANTEN
ANTEN(1)
PIN
L1
1mH
C10
22
R11
1k
C13
560
R13
1k
C14
560
R15
4.7k
C17
100nF
C18
100nF
+5V
C20
22pf
X2
CRYSTAL
C19
22pf
R1
10k
OUT
RV1
85%
50k
RV1(3)
D16
1N4148
U1
OSC1/CLKIN
OSC2/CLKOUT
MCLR/Vpp/THV
RA0/AN0
RA1/AN1
RA2/AN2/VREF-
RA3/AN3/VREF+
RA4/T0CKI
RA5/AN4/SS
RB0/INT
RB1
RB2
RB3/PGM
RB4
RB5
RB6/PGC
RB7/PGD
RC0/T1OSO/T1CKI
RC1/T1OSI/CCP2
RC2/CCP1
RC3/SCK/SCL
RC4/SDI/SDA
RC5/SDO
RC6/TX/CK
RC7/RX/DT
PIC16F876
U1(RB0/INT)
D1 LED-BLUE
D2 LED-BLUE
D3 LED-BLUE
D4 LED-BLUE
D5 LED-BLUE
D6 LED-BLUE
D7 LED-BLUE
D8 LED-BLUE
D12 LED-YELLOW
D11 LED-YELLOW
D10 LED-GREEN
D9 LED-GREEN
+9V
U3
7805
VI
VO
GND
+5v
VCC/VDD
B1
9V
D15
1N4007
C21
220U
C22
100nF
C29
100nF
C31
100nF
C30
100nF
C23
220U
C24
100nF
C25
100nF
C26
100nF
C27
100nF
C28
100nF