Gold Gun AL718

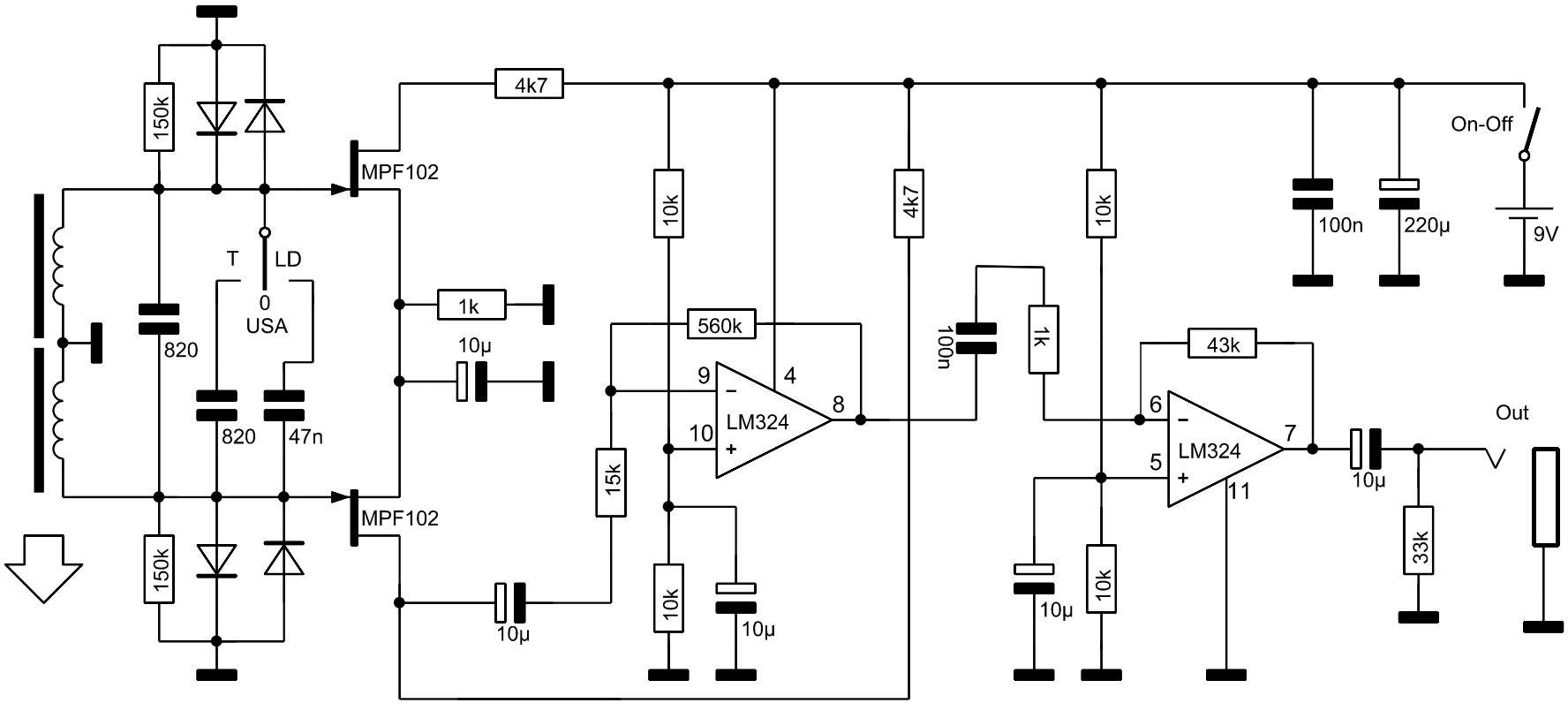

Coil's

337x2 turns
wire 0,2mm

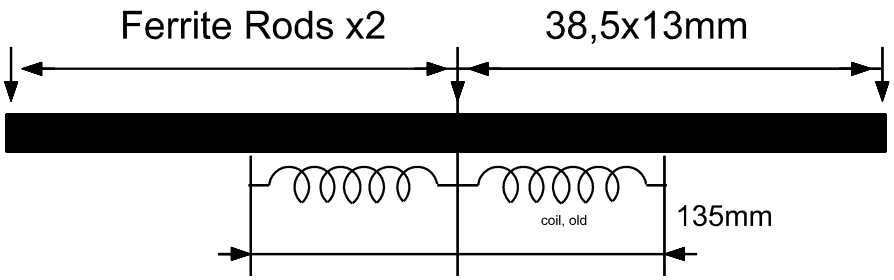

Long Distance...9,5 kHz

USA.....26,7-27 kHz

Top.....19,2 kHz